Instruction manual
Lightswing® Pendant Light Novo

Technical specifications

Size/Dimensions	55x24 cm
Weight	1385 gr (incl. packaging 1515 gr)
Material	3mm MDF
Cord length	150 cm
Lamp fitting	E27

LED

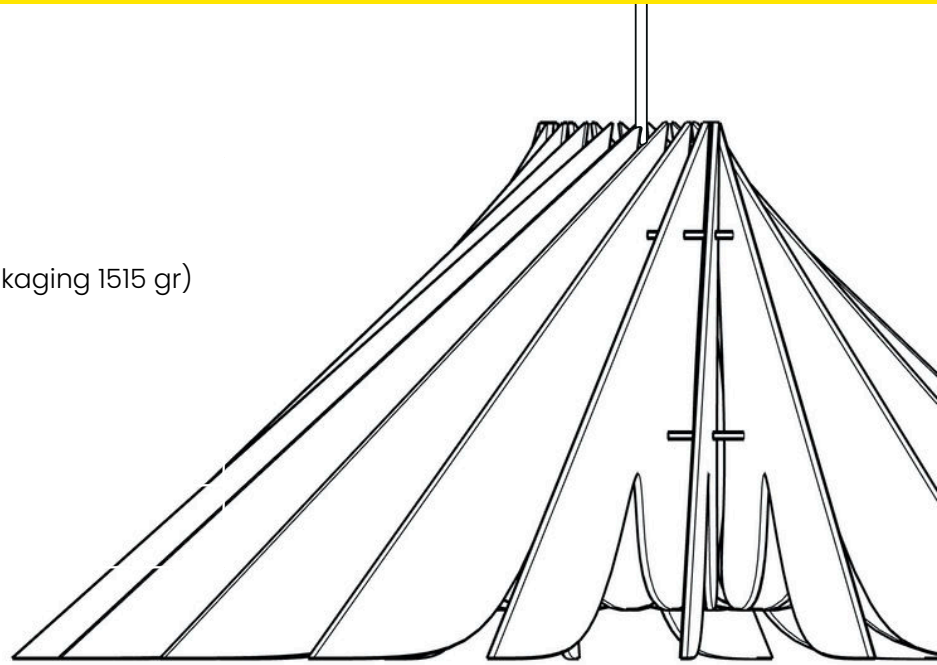

Step 1

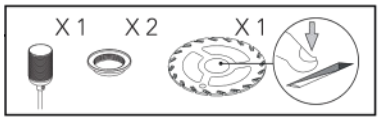

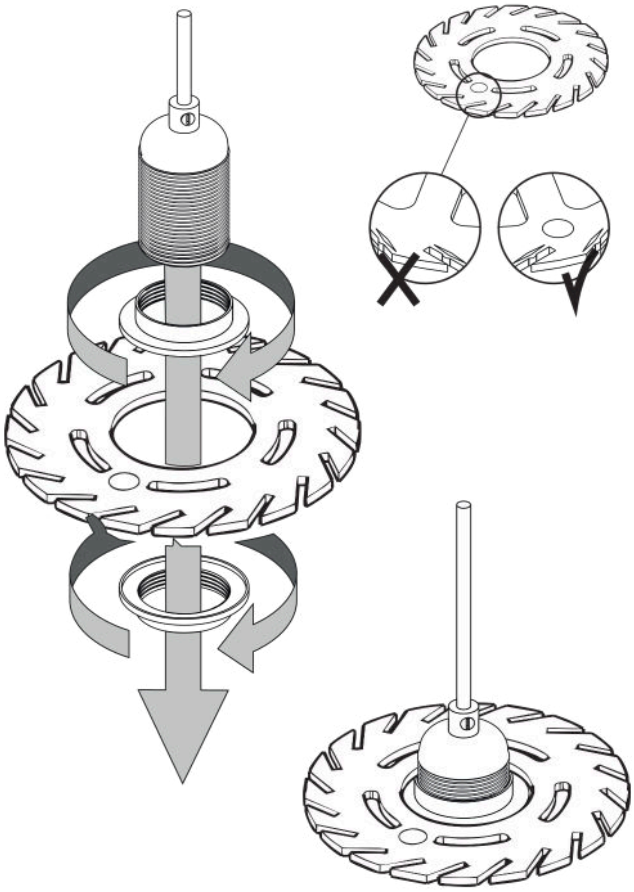

Step 2

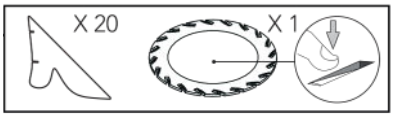

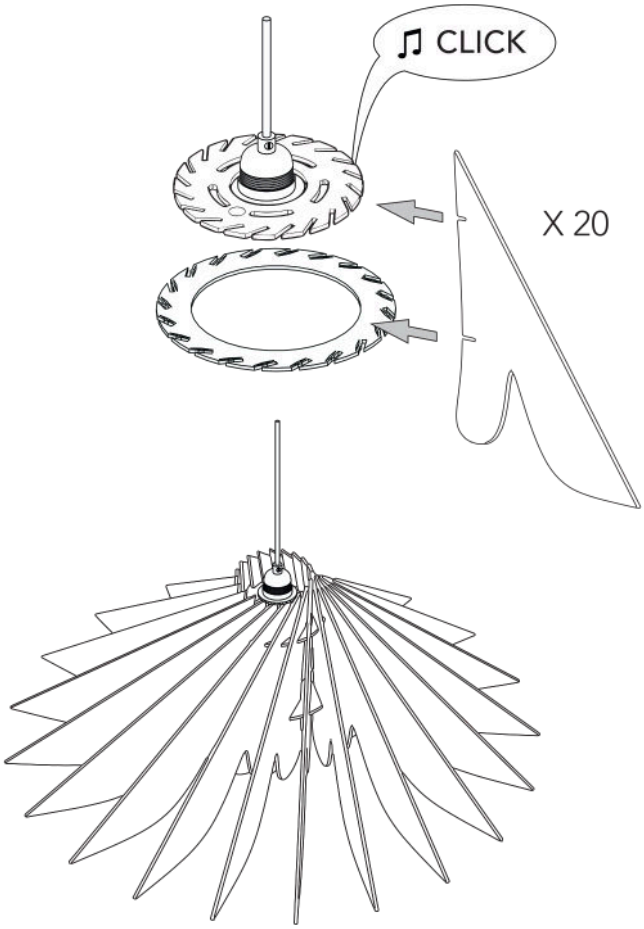

Step 3

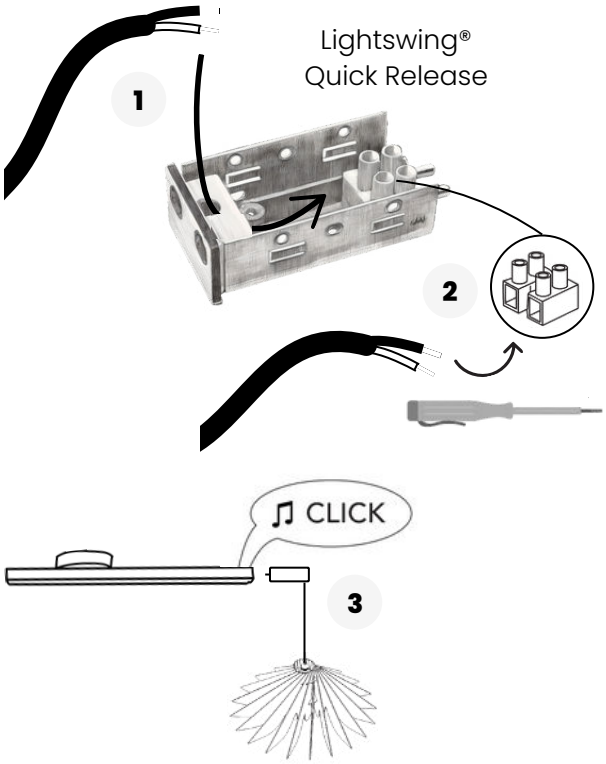
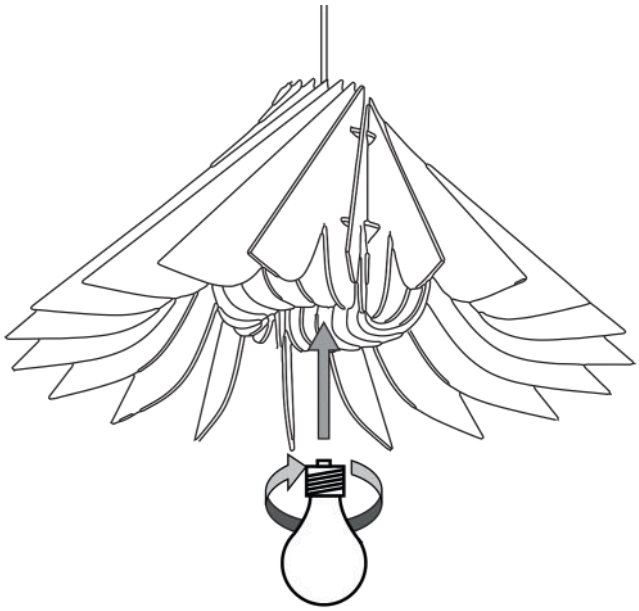
Step 4